GUSTAV KLEIN
Reliable Power Solutions.

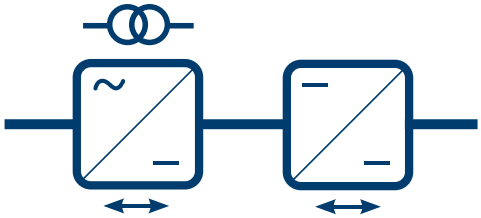

Infeed Test System

TYP I-TS-3870 & TYP MI-TS-3871

I-TS-3870: Single-channel system for testing and simulation of batteries, fuel cells and powertrains. One output with up to 1000 V or 1000 A. Maximum power in single operation 650 kW, up to 1.3 MW in parallel operation.

MI-TS-3871: Multi-channel system for energy-saving tests and simulations. Two or four outputs, up to 1000 V and 1000 A per output (without galvanic isolation between the DC outputs)

General Data:

- Power single system up to 650 kW
- Total power parallel system up to 1.3 MW
- Output voltage single system up to 1000 V
- Output current single system up to 1000 A (higher output current on request)

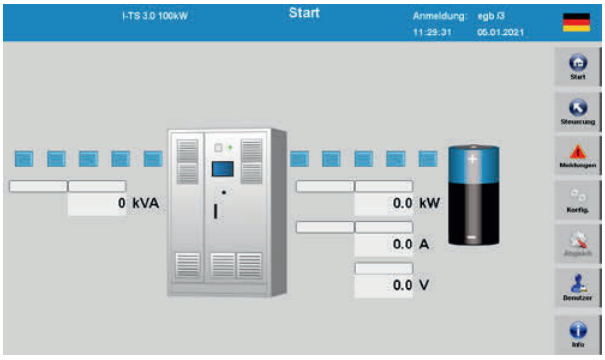

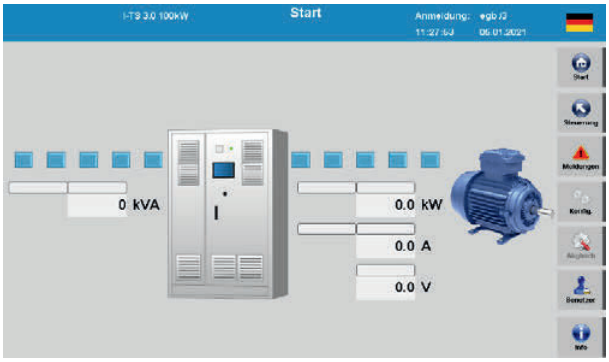

Typical applications:

- Battery simulation (BS)
- Battery test (BT)
- Testing fuel cell
- Testing solar panels
- Testing of charging stations (comemso)
- Power supply of trains

Infeed Test System – Type I-TS-3870:

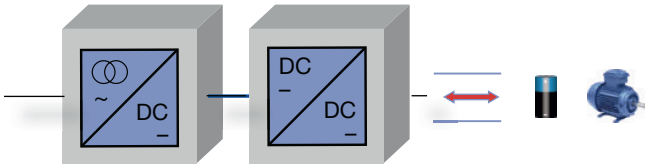

Test of battery charging and discharging

Load for fuel cells (with safety function)

Power supply and power deduction of powertrain

source: Schaeffler

Testing power supply for fuses, contactors and MCCB

Test of DC-motors

Multi-Channel-Infeed-Test-System – Type MI-TS-3871

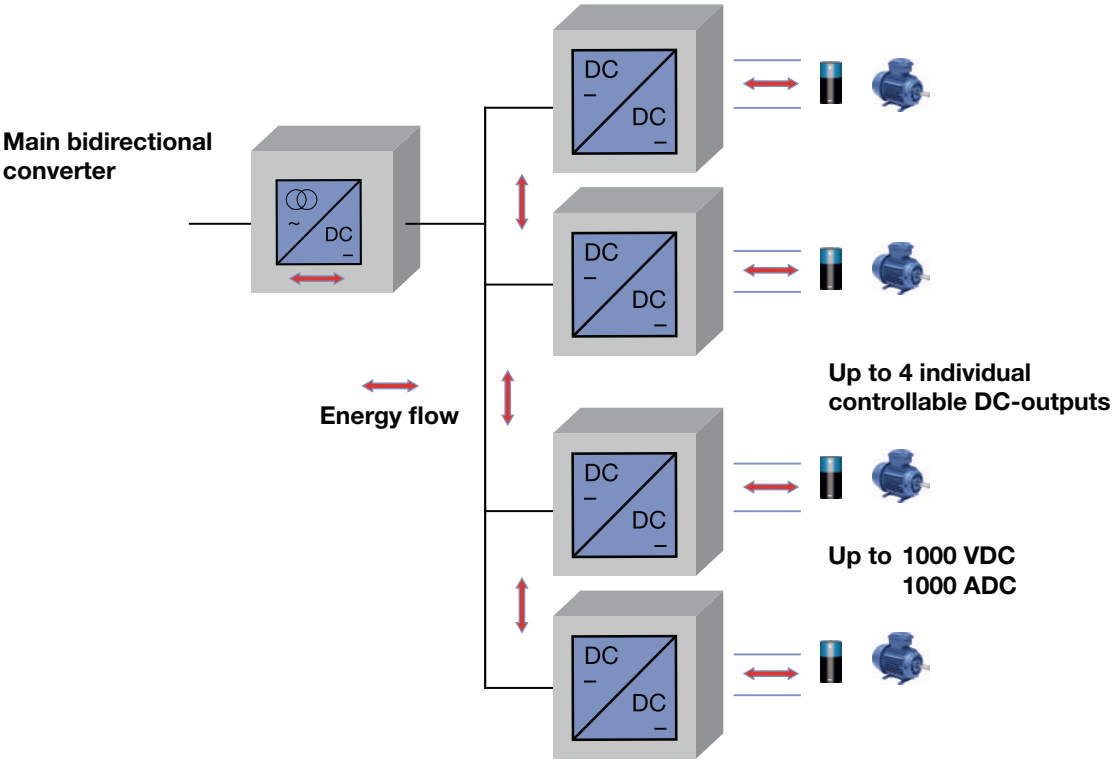

Typ	Rated power (kW)	DC Voltage (V)	DC-Current (A)	Typical current rise time 10 % - 90 % (ms)
I-TS-3870-300	60-120	5-300	200-1000	< 1
I-TS-3870-600	60-500	5-600	200-1000	< 1
I-TS-3870-800	100-500	5-800	200-1000	< 1
I-TS-3870-1000	100-650	5-1000	200-1000	< 1,3

AC - Input voltage / AC – Input frequency	380 / **400*** / 440 / 480 / 500 / 690 V ±10 %, 3-phase, PE, 50 / 60 Hz ± 6 %
Measuring resolution	voltage: 16 Bit ADC current: 16 Bit ADC
Control accuracy	voltage 0.1 % fs current 0.1 % fs
Voltage tolerance dynamic (0 – 100 % INom in 3 ms)	< 3 % fs
Voltage ripple	≤ 0.1 % eff. fs
Current ripple	≤ 0.1 % eff. fs
Short circuit behavior	Short circuit proof (Ik < 3 kA)
Permissible ambient temperature	+5 to +40 °C
Climate class	1K21/1M11 according to EN60721 (85 % relative humidity non condensing with cabinet heating up to 95 % rel. humidity without condensing)
Distance from ceiling min.	300 (standard, IP20)
Installation	Operating area with restricted access installation on non-flammable floor
Protection class	IP20 according to IEC 60529 others on request
Safety	EN ISO 13849-1
Basic standard	EN 62040
EMC	EN 61000-2-4 grid disturbances EN 61000-6-2 interference immunity EN 61000-6-4 interference emission EN 61800-3 Kat C2 (A1) variable – speed electrical drives

Subject to change without notice (tech)

* Standard 400 V

- „Battery tester“ version
- Highly dynamic inverter
- Short circuit proof < 3 kA, < 8 kA at 1000 A systems
- Electrical isolation to grid
- Control accuracy 0.1 % fs
- Voltage ripple 0.1 % fs
- DC current measurement with 0.1 % fs accuracy
- Current rise time < 1 msec (300 - 800 V), < 1.3 msec (1000 V)
- Seamless transition source/sink
- Main switch (switch disconnector with fuses in the AC input; lockable in Off-Position)
- Safety control for Performance Level d (PLd) in accordance with ISO 13849-1 / EN 60204-1
- TFT display with touch operation
- Stop button (black mushroom button) in cabinet door
- Voltmeter and ready indicator light in cabinet door
- DC output contactor
- Connection terminals for DC voltage measurement (0.1 % fs accuracy with sense lines)
- Connection terminals for external „Emergency Stop“
- Connection terminals for external „Stop“
- Connection terminals for calibrating case
- Interface MOD-bus / TCP-IP
- Interface CAN-bus („100 Hz“ with dbc file)
- Interface VNC over Ethernet
- Protection type IP20
- Air cooled
- High efficiency
- Noise-reduced version (rubber buffer, fan control)

Version „Battery simulator“

I-TS, 800 V DC, 600 A
Small voltage dip at load step

- Setting: constant voltage
- Max. accepted deviation of voltage at load step 0-100 % in 3 msec: 1 % fs = 8 V
- Measuring of transient voltage deviation and control settling time

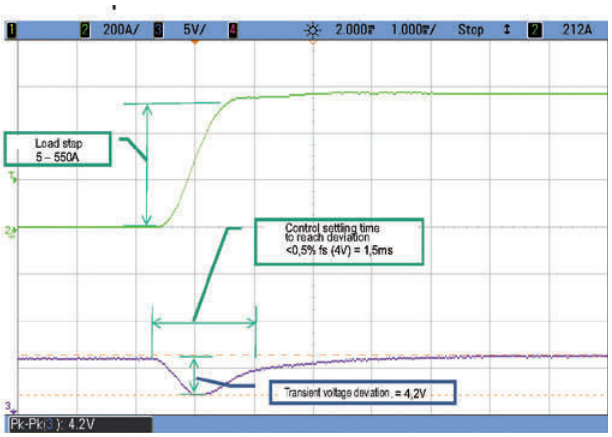

output current output voltage

typical course

Version „Battery tester“

I-TS, 1000 V DC, 1000 A, 100 kW
Fast current slew rate

- Output voltage 80 V DC
- Changing setpoint for current from - 1000 A to + 1000 A
- Measuring of current rise time (- 900 A to + 900 A) = 1.2 msec

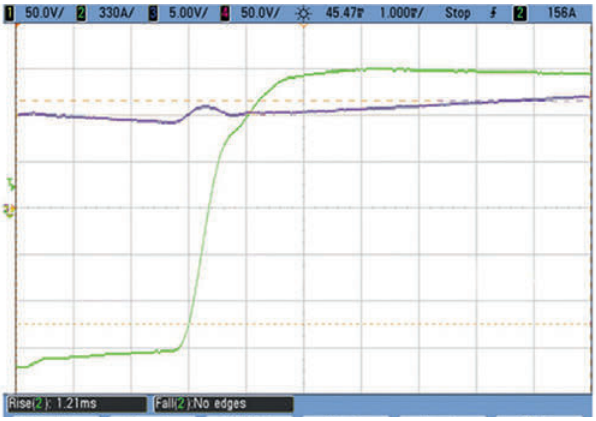

output current output voltage

typical course

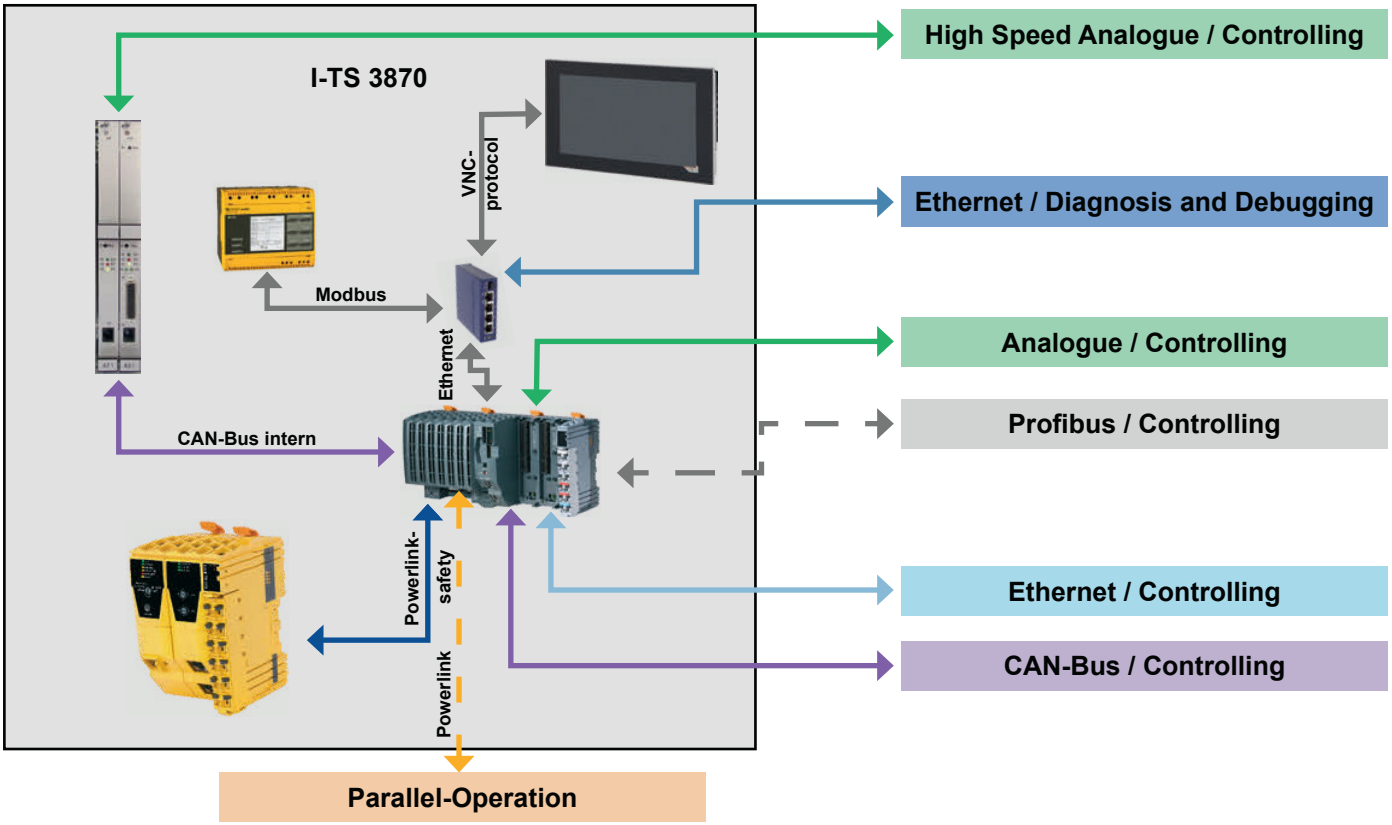

Performance level „d“ (machine directive: EN ISO 13849-1)

- Redundant Hardware
- Redundant wiring
- Two separate channels
- Constant test of inputs and outputs
- Safe shutdown in case of error

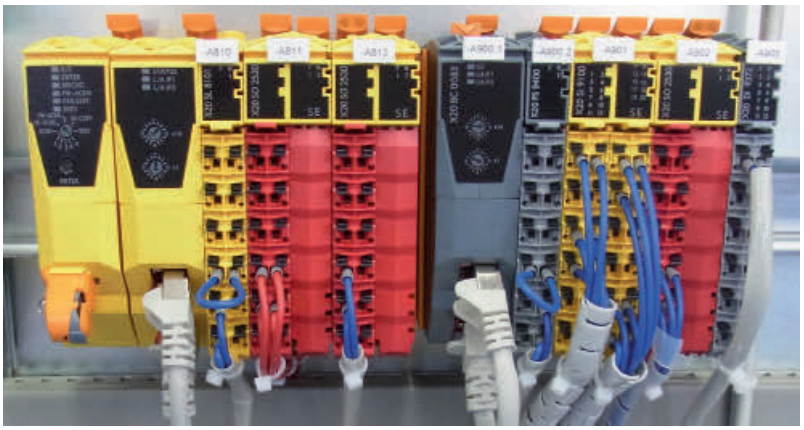

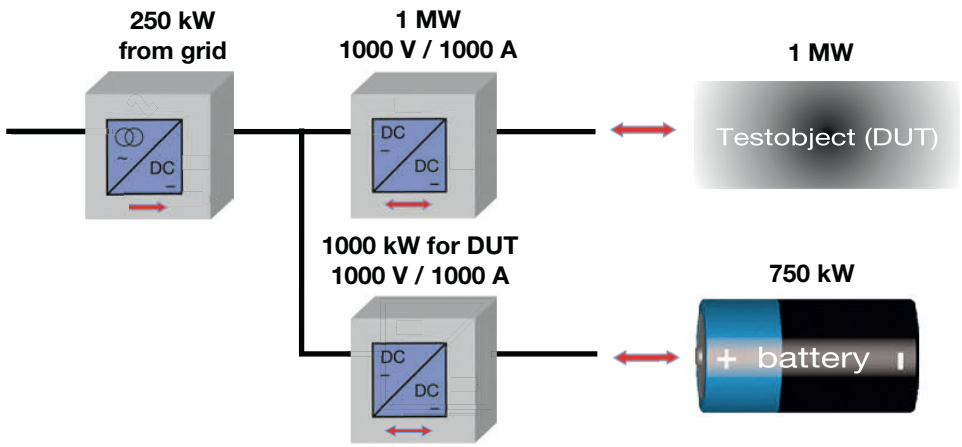

Power supply with internal energy recovery for development and testing of e-powertrain

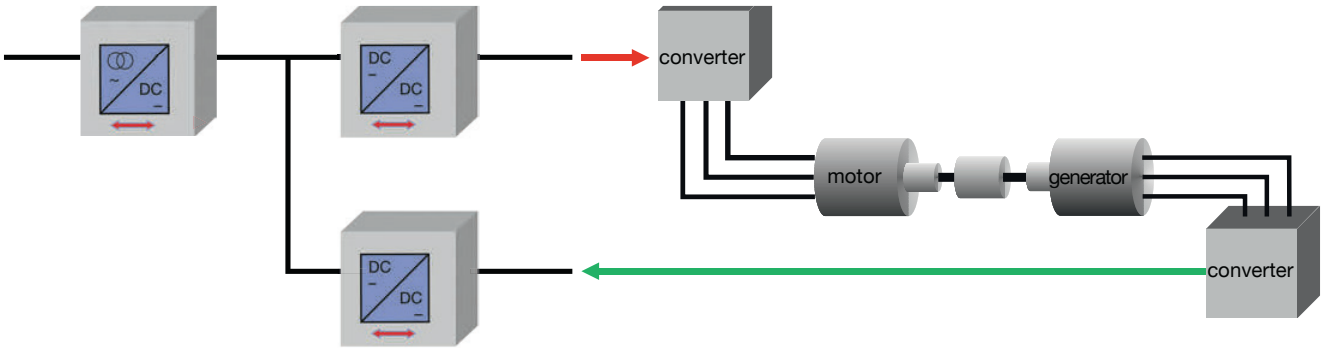

Control device
© AST, Wolnzach

Fuel cell testing

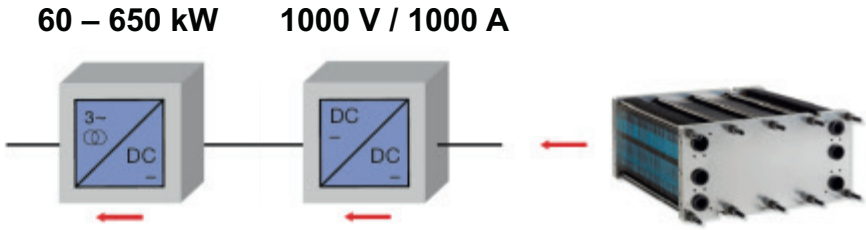

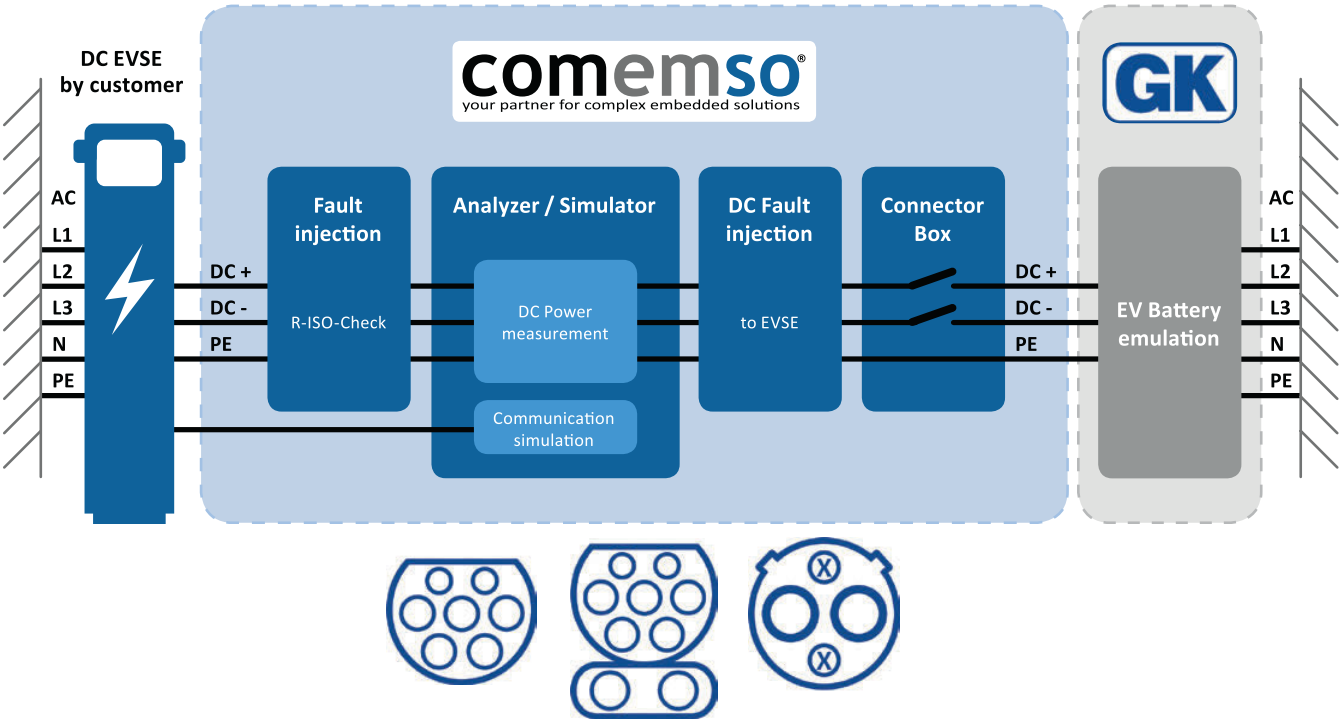

DC application: EV Test (DC EVSE Simulation)

DC application: EV Test (DC EVSE-Simulation).

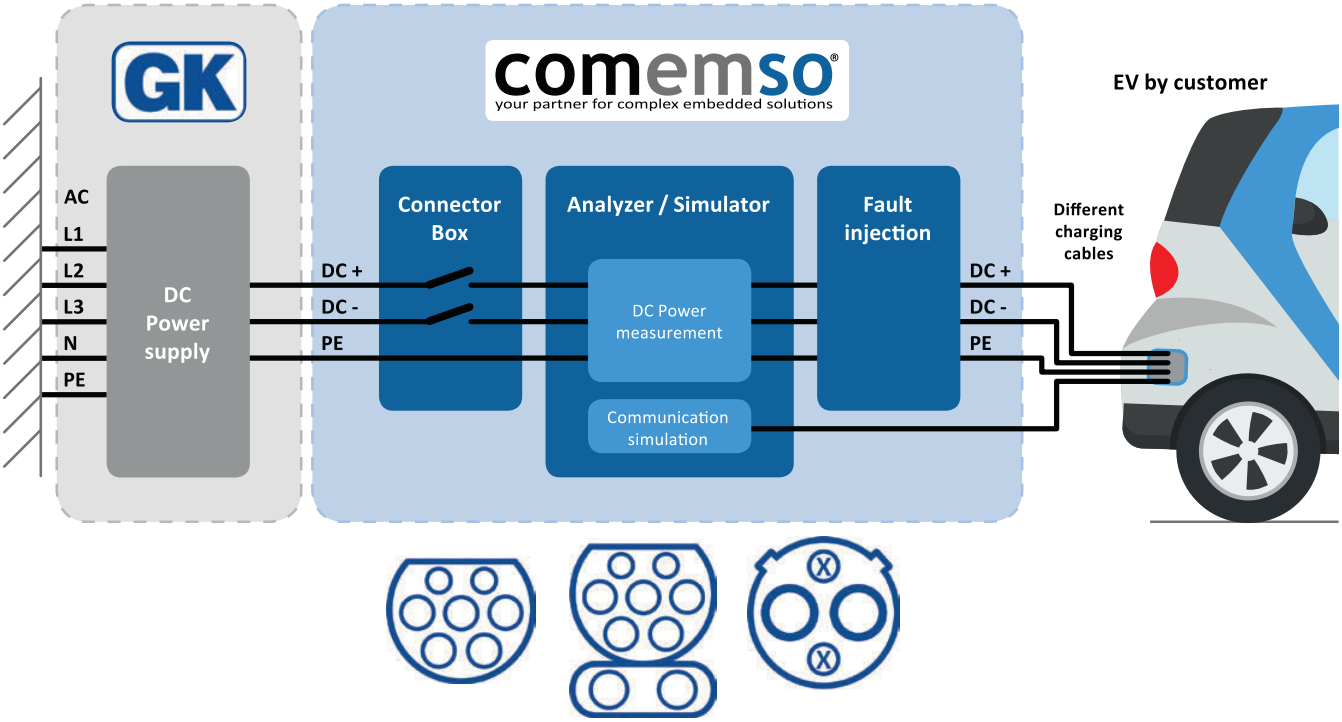

1. Adaptation to test application

- Insulation monitoring device
- Operating mode battery simulator
- Operating mode battery simulator/tester switchable
- Output contactor with increased short-time withstand current
- Current range switching 100% and 10%
- Protective diode for sink mode
- Parallel control device
- PDSB (cabinet for additional options)
- Discharge Unit
- PDU (cabinet for DUT connection)
- Capacity box
- Safety performance level „e“

2. Adaptation to customer specification

- Adaptation safe shutdown time
- Intermediate discharge DC-link
- Emergency stop at door
- Door contact/door interlock
- Special door lock
- Special input voltage
- Adaptation to USA/CAN market
- Cabinet lamp/cabinet heating
- Single-wire marking
- Cabinet type Rittal - VX
- Base frame control cabinet
- Cabinet on wheels
- Special paint

3. Interfaces

- Remote contacts
- SCPI/EtherCAT/PROFIBUS/PROFINET
- Analogue
- High speed analogue I+
- High speed CAN (1 kHz)
- Remote control
- Matlab-Simulink
- Labview

4. Protection class control cabinet

- IP21/IP22/IP23/IP54
- Increase protection class from below
- Increase Protection class at open door IPX0B
- Fire protection

5. Cabels and wires

- Halogen free cables
- Control cable/Sense cable/Power cable

Insulation monitoring device at DC output

DC-DC output contactor

[1] A discharge unit always assumes a PDSB. From a rectifier output

I-TS-3870 Single – Standard System

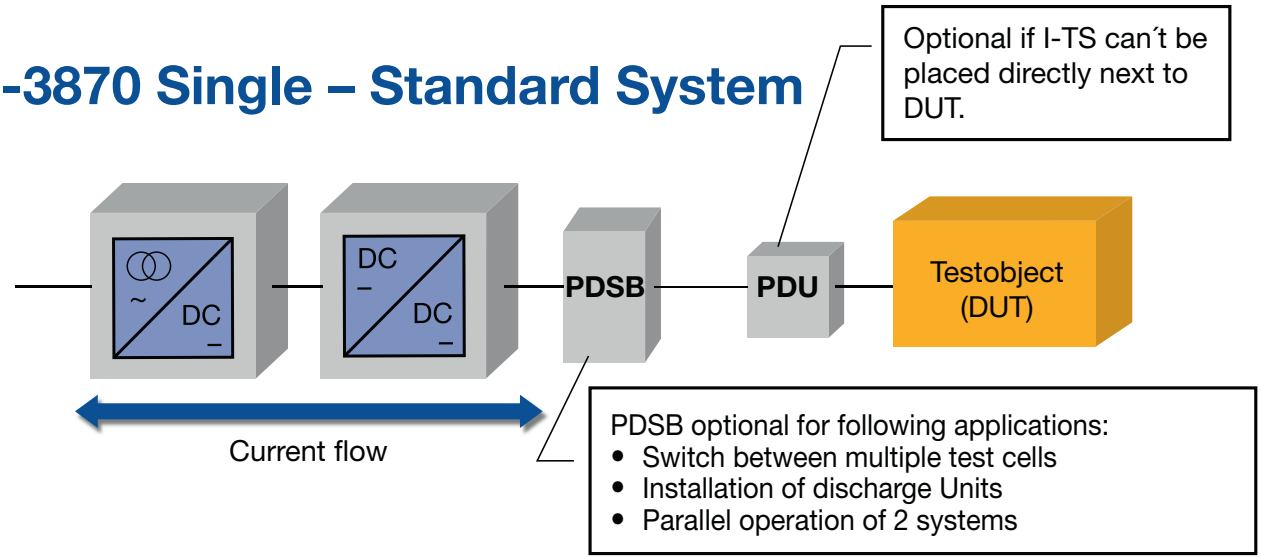

Changeover Test Cells / DUT

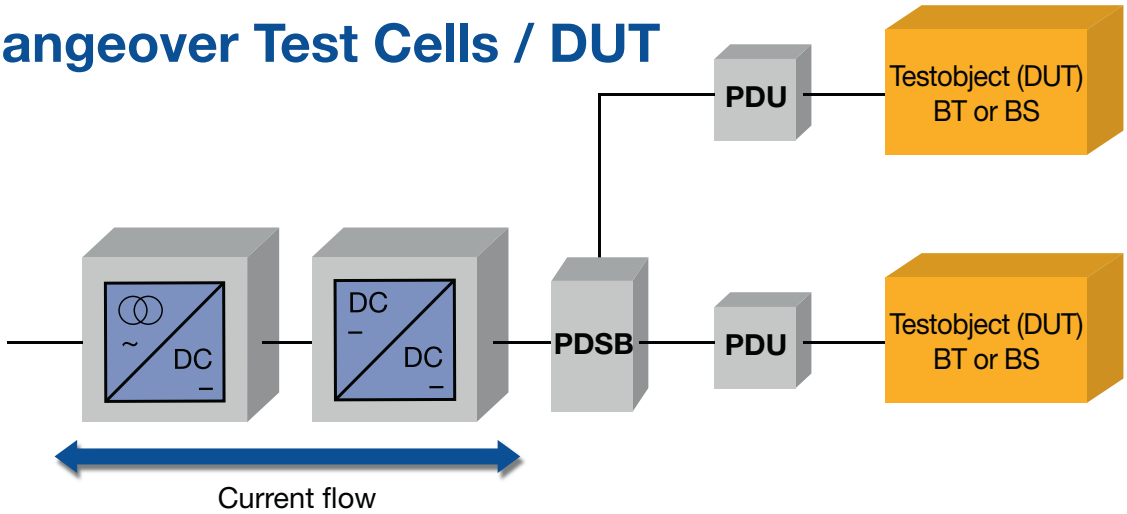

Testing one DUT and connecting simultaneously the second one

I-TS-3870 Parallel – System

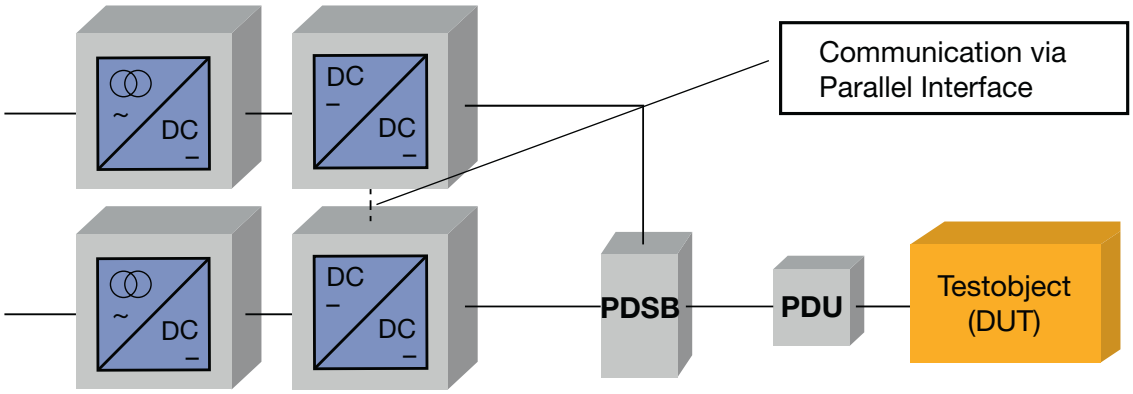

Enlargement of output current and power

Innovation and quality
from Germany and Austria.

GUSTAV KLEIN

Werk Deutschland
Gustav Klein GmbH & Co. KG
Im Forchet 3
86956 Schongau / Germany
vertrieb@gustav-klein.com

Werk Österreich
Gustav Klein GmbH & Co KG
Schießstand 2
6401 Inzing / Austria
vertrieb.wien@gustav-klein.at